Cambridge Assessment International Education

Cambridge International AS & A Level

CANDIDATE NAME

CENTRE NUMBER

CANDIDATE NUMBER

2952326779

PHYSICS **9702/33**

Paper 3 Advanced Practical Skills 1 **October/November 2021**

2 hours

You must answer on the question paper.

You will need: The materials and apparatus listed in the confidential instructions

INSTRUCTIONS

- Answer **all** questions.
- Use a black or dark blue pen. You may use an HB pencil for any diagrams or graphs.
- Write your name, centre number and candidate number in the boxes at the top of the page.
- Write your answer to each question in the space provided.
- Do **not** use an erasable pen or correction fluid.
- Do **not** write on any bar codes.
- You will be allowed to work with the apparatus for a maximum of 1 hour for each question.
- You should record all your observations in the spaces provided in the question paper as soon as these observations are made.
- You may use a calculator.
- You should show all your working and use appropriate units.

INFORMATION

- The total mark for this paper is 40.
- The number of marks for each question or part question is shown in brackets [ ].

For Examiner's Use	
1	
2	
Total	

This document has **12** pages. Any blank pages are indicated.

© UCLES 2021

BLANK PAGE

You may not need to use all of the materials provided.

1 In this experiment, you will investigate combinations of resistors in an electrical circuit.

(a) Fig. 1.1. shows an electrical circuit.

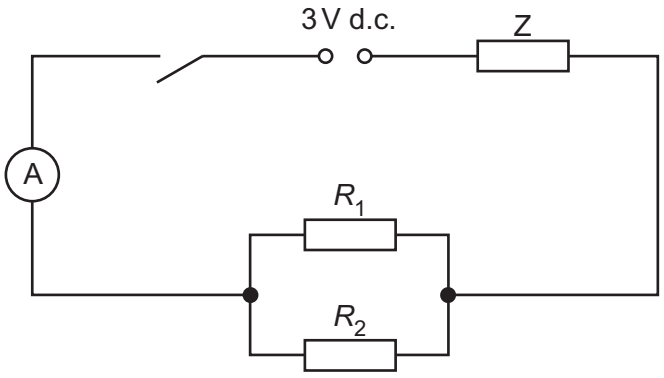

Fig. 1.1

- Set up the circuit shown in Fig. 1.1 using R_1 = 33 Ω and R_2 = 82 Ω.
- Calculate $\frac{R_1R_2}{(R_1 + R_2)}$.

$$\frac{R_1R_2}{(R_1 + R_2)} = \text{.....}\ \Omega$$

- Close the switch.
- Record the ammeter reading I.

I = ...

- Open the switch.

[1]

(b) Use six different pairs of resistors to provide six different values of $\frac{R_1R_2}{(R_1 + R_2)}$.

For each arrangement, record R_1, R_2 and I in a table. Include values of $\frac{R_1R_2}{(R_1 + R_2)}$ and $\frac{1}{I}$ in your table.

[10]

(c) **(i)** Plot a graph of $\frac{1}{I}$ on the *y*-axis against $\frac{R_1R_2}{(R_1 + R_2)}$ on the *x*-axis. [3]

(ii) Draw the straight line of best fit. [1]

(iii) Determine the gradient and *y*-intercept of this line.

gradient = ...

y-intercept = ...

[2]

© UCLES 2021

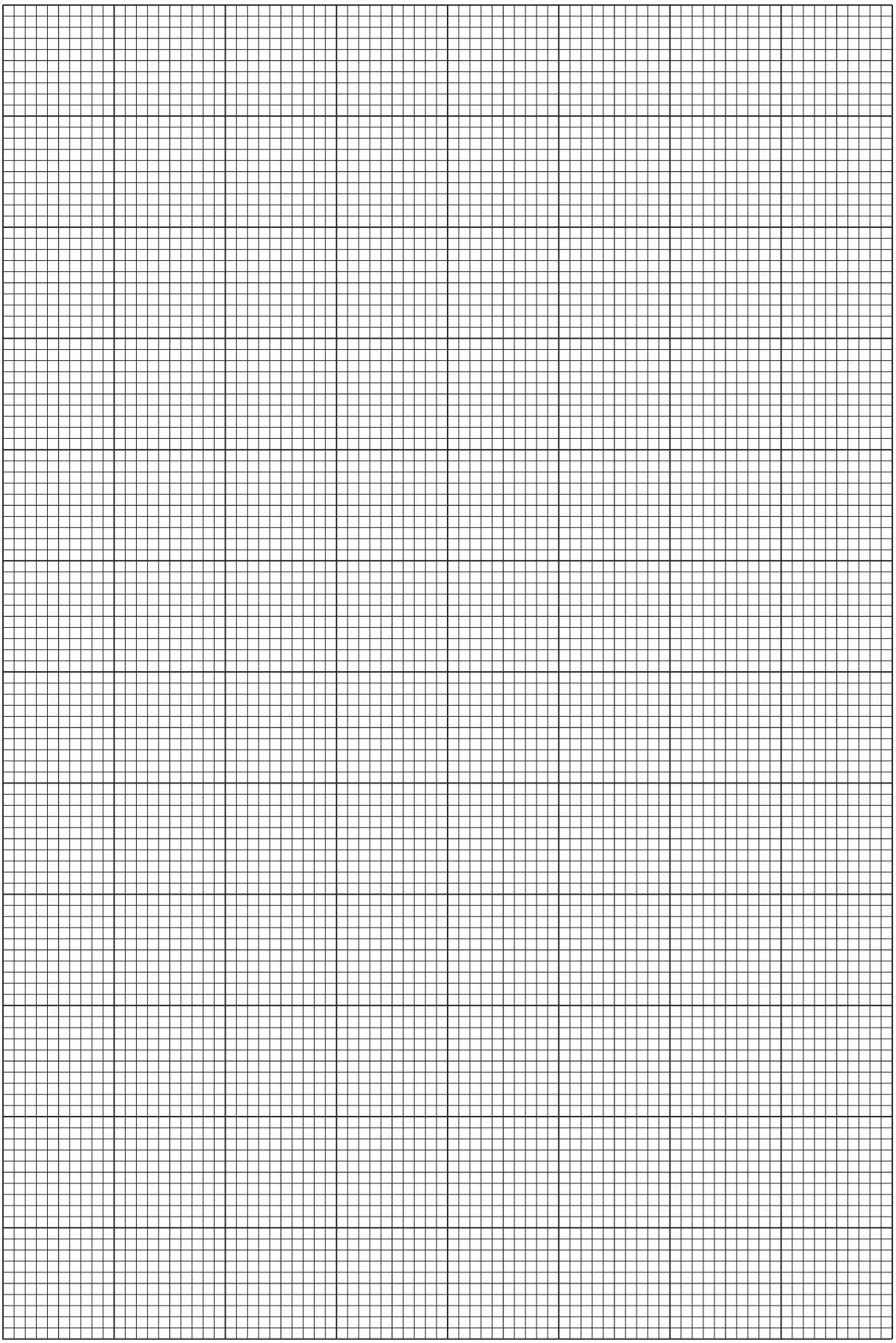

(d) (i) It is suggested that the quantities I and $\frac{R_1R_2}{(R_1 + R_2)}$ are related by the equation

$$\frac{1}{I} = P\left[\frac{R_1R_2}{(R_1 + R_2)}\right] + Q$$

where P and Q are constants.

Using your answers to **(c)(iii)**, determine the values of P and Q.
Give appropriate units.

P = ...

Q = ...
[2]

(ii) The constants P and Q are related to the electromotive force (e.m.f.) E of the power supply and the resistance Z of resistor Z by

$$P = \frac{1}{E} \text{ and } Q = \frac{Z}{E}.$$

Determine the values of E and Z.
Give appropriate units.

E = ...

Z = ...
[1]

[Total: 20]

© UCLES 2021

You may not need to use all of the materials provided.

2 In this experiment, you will investigate the time taken for filter papers to fall in air.

(a) (i) ● You have been provided with filter papers of two different sizes.

Take one sheet of the **smaller** filter paper.

● The diameter of one sheet of filter paper is *d*, as shown in Fig. 2.1.

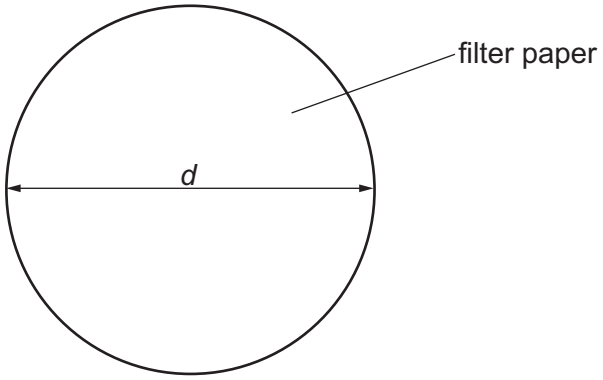

Fig. 2.1

Measure and record *d*.

d = ... cm [2]

(ii) Calculate the area *A* of the filter paper using

$$A = \frac{\pi d^2}{4}.$$

A = ...cm^2 [1]

(iii) Justify the number of significant figures that you have given for your value of *A*.

.....

.....

..... [1]

(b) (i) ● Set up the apparatus as shown in Fig. 2.2.

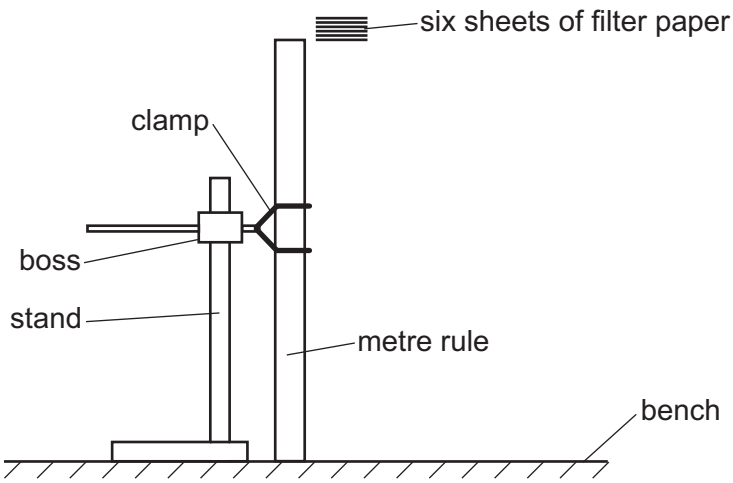

Fig. 2.2

- Hold the six sheets of the smaller filter paper at the top of the metre rule, as shown in Fig. 2.2.
- Release the filter papers and start the stop-watch.
- The time between release and the filter papers hitting the bench is *t*.

  Measure and record *t*.

t = ... s [2]

(ii) Estimate the percentage uncertainty in *t*. Show your working.

percentage uncertainty = ... [1]

(iii) Measure and record the total mass *m* of the sheets of smaller filter paper.

m = ... [1]

© UCLES 2021

(c) (i) Repeat **(a)(i)** and **(a)(ii)** using one of the **larger** sheets of filter paper.

d = ... cm

A = ... cm^2
[1]

(ii) Using two sheets of the larger filter paper, repeat **(b)(i)** and **(b)(iii)**.

t = ... s

m = ...
[1]

(d) It is suggested that the relationship between t, m and A is

$$kt = mA$$

where k is a constant.

(i) Using your data, calculate two values of k.

first value of k = ...

second value of k = ...
[1]

(ii) Explain whether your results support the suggested relationship.

.....

.....

.....

..... [1]

(e) (i) Describe four sources of uncertainty or limitations of the procedure for this experiment.

1. .....

.....

2. .....

.....

3. .....

.....

4. .....

.....

[4]

(ii) Describe four improvements that could be made to this experiment. You may suggest the use of other apparatus or different procedures.

1. .....

.....

2. .....

.....

3. .....

.....

4. .....

.....

[4]

[Total: 20]

BLANK PAGE

Permission to reproduce items where third-party owned material protected by copyright is included has been sought and cleared where possible. Every reasonable effort has been made by the publisher (UCLES) to trace copyright holders, but if any items requiring clearance have unwittingly been included, the publisher will be pleased to make amends at the earliest possible opportunity.

To avoid the issue of disclosure of answer-related information to candidates, all copyright acknowledgements are reproduced online in the Cambridge Assessment International Education Copyright Acknowledgements Booklet. This is produced for each series of examinations and is freely available to download at www.cambridgeinternational.org after the live examination series.

Cambridge Assessment International Education is part of the Cambridge Assessment Group. Cambridge Assessment is the brand name of the University of Cambridge Local Examinations Syndicate (UCLES), which itself is a department of the University of Cambridge.

© UCLES 2021